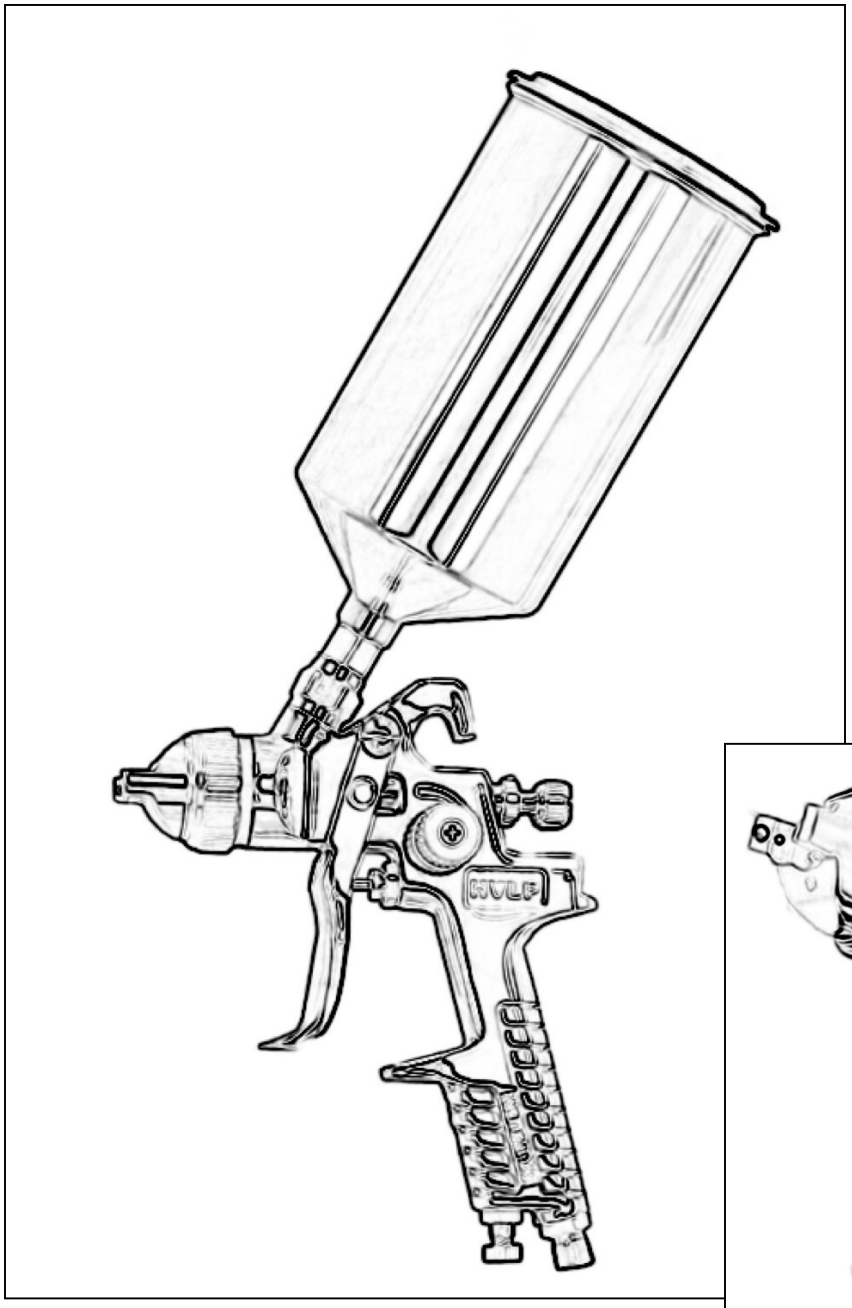

WARWICK
INDUSTRIES INC.

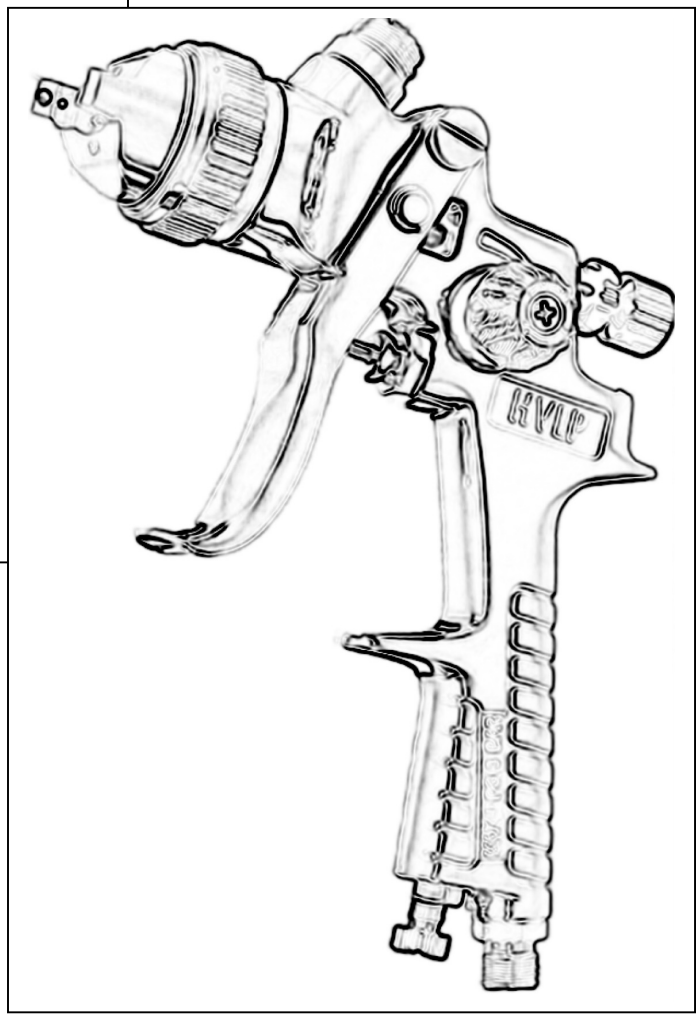

881H & 827H

Spray Gun Model # 881H / 827H [HVLP]

High volume low pressure spray gun complaint with EPA regulation, the transfer efficiency of HVLP gun exceeds 65% to meet VOC legislation, also reduces overspray, saving cost of materials.

Technical Data

Recommended spray gun inlet pressure: 43 PSI
Recommended spray distance: 6''-12''
Air consumption: 13 CFM @ 43 PSI inlet pressure
Weight: 1.14 lbs (gun only)
Finish: Nickel plated. Aluminum Die Cast Gun Body, Stainless Steel Nozzle and Needle are Standard on all Warwick guns.
Tip Sizes available (mm): 1.2 / 1.3 / 1.4 / 1.5 / 1.7 / 2.0; Special order sizes available (mm): 1.0 / 2.3

Disposable cup reference: 3M PPS ADAPTOR # 2 (16003) ; DeKups DPC-11 (802204)

Safety Instruction

See page 3. Please make sure you read the complete instructions carefully before you start use of spray gun.

Operation

NOTE: **DO NOT** disassemble a brand new spray gun without testing/spraying it first.

- Always wear proper protection equipment when using it.
- Tighten packing nut and screws if needed; tighten the fluid nozzle firmly by proper tool (see website for details).
- Rinse the fluid path with appropriate cleaning solution.
- Adjust air cap to a proper position as shown to ensure a perfect spraying pattern.

(In normal use, the nozzle wings are horizontal as shown, this provides a vertical fan-shaped pattern which gives maximum, even, material coverage as the gun is moved back and forth parallel to the surface being finished.

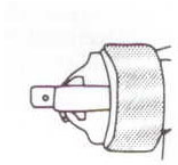

- Insert the paint strainer and install the cup by WRENCH. **DO NOT** use your hand to install or uninstall the cup at any time.
- Fill the cup properly and close the lid.
- Connect spray gun to a proper air compressor; ensure minimum compressed air volume and the proper pressure according to the technical data we suggest for this gun. For air compressor set up, please refer to the user manual the air compressor manufacturer provides. We suggest a 5 HP and up air compressor and a 20 and up gallon air tank to operate this spray gun continuously nonstop in a reasonable time period.
- Start spraying:

** Before pulling the trigger, the regulator should read at 43 PSI or higher (for your best spraying performance).
** Fluid control screw: to increase and decrease the fluid flow.
** Spray width adjustment screw (Fan Control) : to change the fluid pattern round or flat.
** Set atomization pressure at no more than 63 PSI. For optimum performance, some materials may spray better below 63PSI, if unsure; always test before spraying on the final production.
** During spraying, if it sprays too fine, decrease the air pressure or open the fluid control screw; if it sprays too thick, close the fluid control screw a bit. Repeating the adjustment if needed.

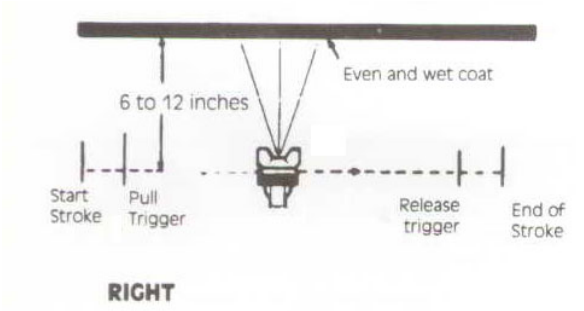

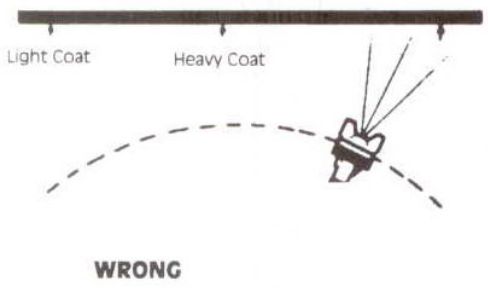

- Proper handing of the gun is essential for obtaining a good finish. The gun should be held at a right angle to the surface being covered, and moved parallel with it. For precise control of the gun and material, the trigger should be released before the end of the stroke.
- Hold the gun from 6 to 12 inches away from the surface depending on material and atomizing pressure. For a uniform finish, lap each stroke over the preceding stroke, making sure the spray is smooth and wet. Using the lowest possible atomizing air pressure will reduce overspray and provide maximum efficiency.

Cleaning & Maintenance

- Prior to cleaning, make sure to disconnect the spray gun from the air compressor system.
- Empty the cup, using WRENCH to remove the cup from the spray gun. NEVER USE HAND.
- Always use proper tool to assemble and disassemble the parts**. DO NOT remove the brass baffle. If you need to, make sure it's CLOCK-WISE to open.**
- Use proper cleaning solution. DO NOT use acid or any other aggressive chemical as they may result in parts failure.
- Submerge the front end of the gun in solvent just to cover the fluid connection. Paint built up on the gun should be removed by using tools [ACC-818] cleaning kit.
- Never submerge the entire spray gun in solvent :
  - This will dissolve the lubricant in the leather packing and on wear surfaces, causing them to dry out and resulting in difficult operation and faster wear.
  - Air path in the gun will clog with dirty solvent.
- Using a rag moistened with solvent, wipe down the outside of the gun.
- Oil gun daily. Use a drop of lightweight machine oil on Fluid needle, Air valve packing, and Trigger pivot point.

NOTE: DO NOT use lubricants which contain silicone. Silicone may cause defects in the finish application.

- Submerge the front end of the gun in solvent just to cover the fluid connection. Paint built up on the gun should be removed by using tools [ACC-818] cleaning kit.
- To clean nozzle, immerse it in solvent until dried material is dissolved, and blow it clean afterwards. **DO NOT** use metal or sharp instrument to probe any of the holes in the nozzle.

Service, Warranty and Liability

Warwick Industries Inc. CANNOT be held responsible in the following cases:

- When proper operating instruction is disregarded.
- When spray gun is manipulated, altered, inappropriate assemble/disassemble or use with non-warwick original parts on the spray guns.

Warranty detail information is listed on our website. For service, you should reach your local distributor for further assistance. If your distributor is not able to help, please contact us at customer.support@warwick-sprayguns.com

WARNING - FOLLOW THESE RULES FOR SAFE OPERATION!

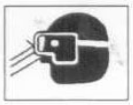

- During cleaning and flushing, solvents can be forcefully expelled from fluid and air passages. Some solvents can cause eye injury.
- Be sure all others in the area are wearing impact-resistant eye and face protection.
- Even small projectiles can injure eyes and cause blindness.

- Air under pressure can cause severe injury. Always shut off air supply, drain hose of air pressure and disconnect tool from air supply when not in use, before changing accessories or when making repairs. Never direct air at yourself or anyone else. Whipping hoses can cause serious injury. Always check for damaged or loose hoses and fittings. Never use quick change couplings at tool. They add weight and could fail due to vibration. Instead, add a hose whip and connect coupling between air supply, and hose whip, or between hose whip and leader hose. Do not exceed maximum air pressure of 63 PSI.
- Always use tool a safe distance from other people in work area.
- Maintain tools with care. Keep tools clean and oiled for best and safest performance. Follow instructions for lubricating and changing accessories. Wiping or cleaning rags and other flammable waste materials must be placed in a tightly closed metal container and disposed of later in the proper fashion.
- Do not wear loose or ill-fitting clothing, remove watches and rings.

- Don't over reach. Keep proper footing and balance at all times. Slipping, Tripping and Falling can be a major cause of serious injury or death. Be aware of excess hose left on the walking or work surface.
- Don't force tool. It will do the job better and safer at the rate for which it was designed.
- Don't abuse hoses or connectors. Never carry tool by the hose or yank it to disconnect from power supply. Keep hoses from heat, oil and sharp edges. Check hoses for weak or worn condition before each use, making certain that all connections are secure.

- High sound levels can cause permanent hearing loss. Protect yourself from noise. Noise levels vary with work surface. Wear ear protectors.
- When possible, secure work with clamps or vise so both hands are free to operate tool.
- Repetitive work motions, awkward positions and exposure to vibration can be harmful to hands and arms.
- Avoid inhaling dust or handling debris from work processes which can be harmful to your health.
- Operators and maintenance personnel must be physically able to handle the bulk, weight and power of this tool.
- This tool is not intended for use in explosive atmospheres and is not insulated for contact with electric power sources.
- Solvent and coatings can be highly flammable or combustible especially when sprayed. Adequate exhaust must be provided to keep air free of accumulations of flammable vapors.
- Smoking must never be allowed in the spray area.
- Fire extinguishing equipment must be present in the spray area.
- Never spray near sources of ignition such as pilot lights, welders, etc.

- Halogenated hydrocarbon solvents - for example; methylene chloride, are not chemically compatible with the aluminum that might be used in many system components. The chemical reaction caused by these solvents reacting with aluminum can become violent and lead to an equipment explosion. Guns with stainless steel fluid passages may be used with these solvents. However, aluminum is widely used in other spray application equipment - such as material pumps, cups and regulators, valves, etc. Check all other equipment items before use and make sure they can also be used safely with these solvents. Read the label or data sheet for the material you intend to spray. If in doubt as to whether or not a coating or cleaning material is compatible, contact your material supplier.

- Sprayed materials may be harmful if inhaled, or if there is contact with the skin. Adequate exhaust must be provided to keep the air free of accumulations of toxic materials. Use a mask or respirator whenever there is a chance of inhaling sprayed materials. The mask must be compatible with the material being sprayed and its concentration.

TROUBLESHOOTING

SPRAY PATTERN/ CONDITION	PROBLEM	SOLUTION
	One side of nozzle wing is clogged.	Soak nozzle in solvent to loosen clog, then blow air through until clean. To clean orifices use a broom straw or toothpick. Never try and detach dried material with sharp tool.
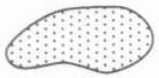	A.) Loose air nozzle. B.) Material around outside of air nozzle has dried.	A.) Tighten air nozzle. B.) Take off air nozzle and wipe off fluid tip, using rag moistened with thinner.
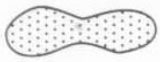	A.) Atomization air pressure is set too high. B.) Trying to spray a thin material in too wide a pattern.	A.) Reduce air pressure. B.) Increase material control by turning fluid control screw to left, while reducing spray width by turning spray width adjustment screw to right.
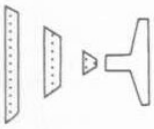 Spitting	A.) Packing around needle valve is dried out. B.) Fluid nozzle loosely installed, or dirt between nozzle and body. C.) Loose or defective swivel nut on siphon cup.	A.) Back up knurled nut , put a few drops of machine oil on packing, re-tighten nut. B.) Take off fluid nozzle, clean rear of nozzle and seat in gun body. Replace nozzle and bring in tight to body. C.) Tighten or change out swivel nut
Improper spray pattern.	A.) Gun improperly adjusted B.) Dirty air cap C.) Fluid tip obstructed D.) Sluggish Needle	A.) Readjust gun. Follow instructions carefully. B.) Clean air cap C.) Clean D.) Lubricate.
Unable to get round spray.	Fan adjustment screw not seating properly.	Clean or replace.
Will not spray.	A.) No air pressure at gun. B.) Fluid pressure too low with internal mix cap and pressure tank. C.) Fluid control screw not open enough. D.) Fluid too heavy for suction feed.	A.) Check air supply and air lines. B.) Increase fluid pressure at tank. C.) Open fluid control screw. D.) Thin material or change to pressure feed.
Fluid leakage from packing nut.	A.) Packing nut loose. B.) Packing worn or dry.	A.) Tighten, but not so tight as to grip needle. B.) Replace packing or lubricate
Dripping from fluid tip.	A.) Dry packing. B.) Sluggish needle C.) Tight packing nut. D.) Worn fluid nozzle or needle.	A.) Lubricate. B.) Lubricate. C.) Adjust. D.) For pressure feed, replace with new fluid nozzle and needle.
Thin, sandy coarse finish	A.) Gun held too far from surface B.) Atomization pressure set too high	A.) Move gun closer to surface. B.) Adjust atomization pressure
Thick, dimpled finish resembling orange peel	Gun held too close to surface	Move gun further from surface

General guideline for selecting the spray gun tips:

Metric Size	*Decimal Size*	*For Use with Zahn 2 Viscosity Range*	*Fluid Vicosity Types*	***Automotive Paints***	***Industrial / Commercial Wood Work Coatings***
.5mm	.0197 inch	<14-16	Ultra Light	stains, wash primers, dyes, solvents, inks, water.	**stains**, wash primers, **dyes**, solvents, inks, water
.8mm	.0315 inch	<14-16	Very Light	**Base coat , clear coat, single stage.**	
1.0mm	.0394 inch	16-20	Light		primers, acrylics, lacquers, sealers, zinc, chromates, lubricants.
1.1mm	.0433 inch				
1.2mm	.0472 inch	16-20			synthetic enamels, fillers, shellacs, varnishes, primer, epoxies, urethanes, lubricants, wax emulsions, medium latex paint, waterborne industrial coatings, contact adhesives*
1.3mm	.0512 inch	16-20	Medium		
1.4mm	.0551 inch	20-60			
1.5mm	.0591 inch			Single stage, clear coat, primer, sealer, epoxy.	
1.6mm	.0630 inch			Single stage, clear coat, **primer**, sealer, epoxy, polyester.	
1.7mm	.0669 inch	>60	Medium to Heavy		
1.9mm	.0748 inch	>60	Heavy	Primers, gel coat, polyester.	hi-build **latex,** multi color, light texture coatings, **gel coat**
2.0mm	.0787 inch	>60			
2.2mm	.0866 inch	>60			
2.3mm	.0906 inch	>60			
2.5mm	.0984 inch	>60			
3.0mm	.1181 inch	>60			

* 1.4 for typical light viscosity water borne adhesives - for higher viscosities consult your Warwick Rep.
Note: Siphon type HVLP guns generally limited to light to medium viscosity material and low fluid delivery rate.
Always check the material work manuel for best spray tips (size range) recommendation if possible,

	Looks Like	Consistency (Ford #4)	Suggest Tip Sets	Examples
LC	**water alcohol**	Low Viscosity 16 sec. Ford #4 and lower	0.6-1.0 pressure or mini 1.0-1.3 gravity feed	Stains dyes, Automotive base coat, Thin wood working
LCMC	**full bod-ied suger water**	Low to Medium Viscisity 16-28 sec. Ford #4	1.0-1.2 pressure or mini 1.3-1.5 gravity feed	Automotive clear, Plane and Baot Urethanes, Thin wood working
MC	**room temp. pancake syrup**	Medium Viscosity 30-40 sec. Ford #4	1.2-1.3 pressure or mini 1.5-1.8 gravity feed	Wood standard lacquers and enamels, Single stage old enamels
HC	**latex paint**	High Viscosity 45-54 sec. Ford#4	1.5-1.5 pressure or mini 1.6-2.5 gravity	Latex paint, Industrial coatings
VHC	**glue**	Very High Viscosity	1.7-2.8 pressure feed 2.0-3.6 gravity feed	Gel coat Industrial paints and primer